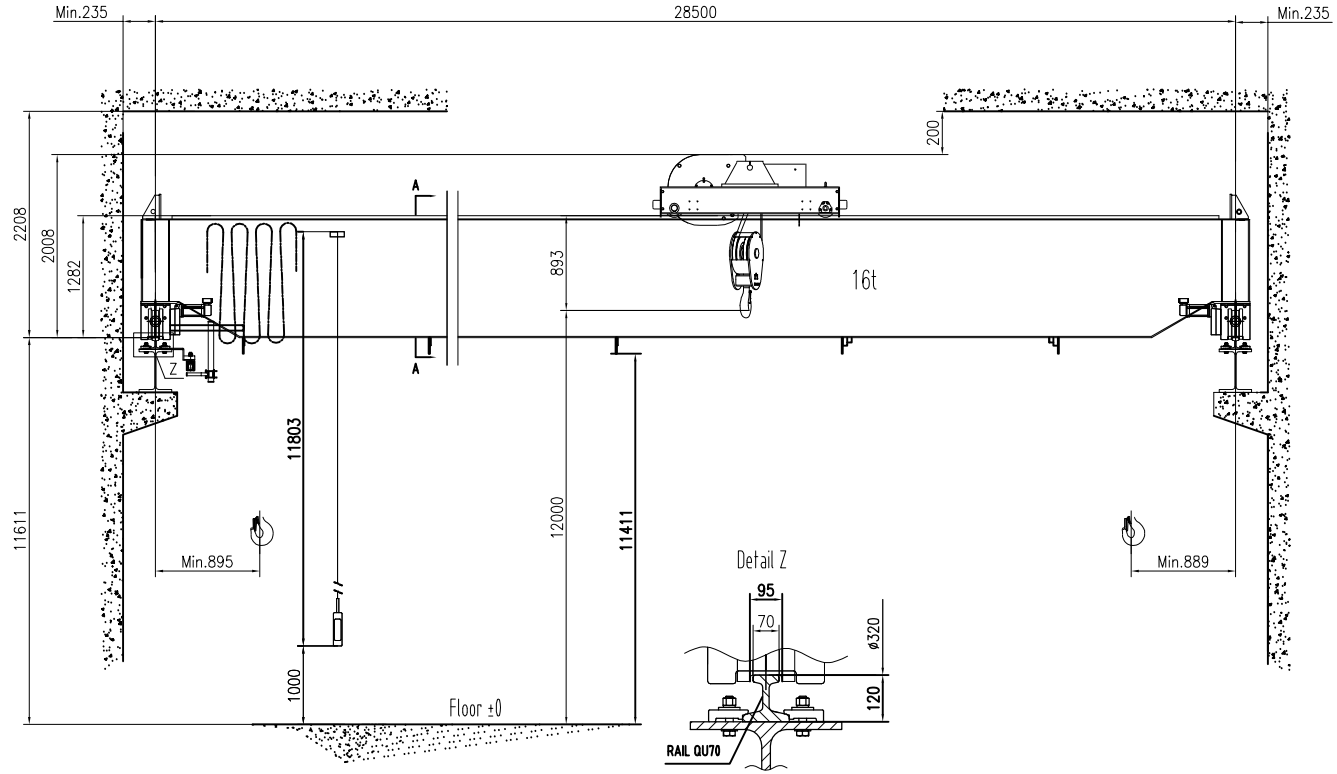

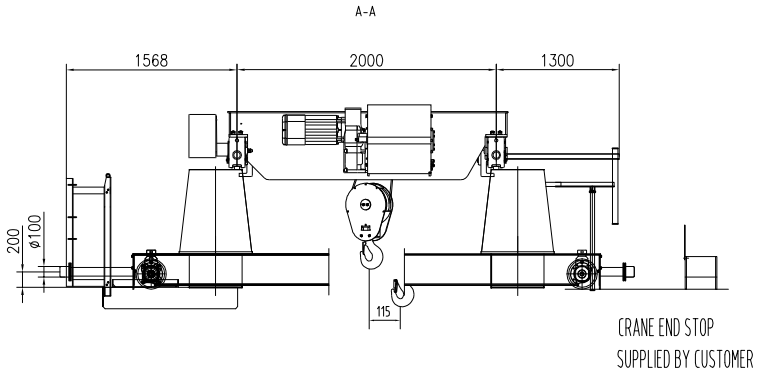

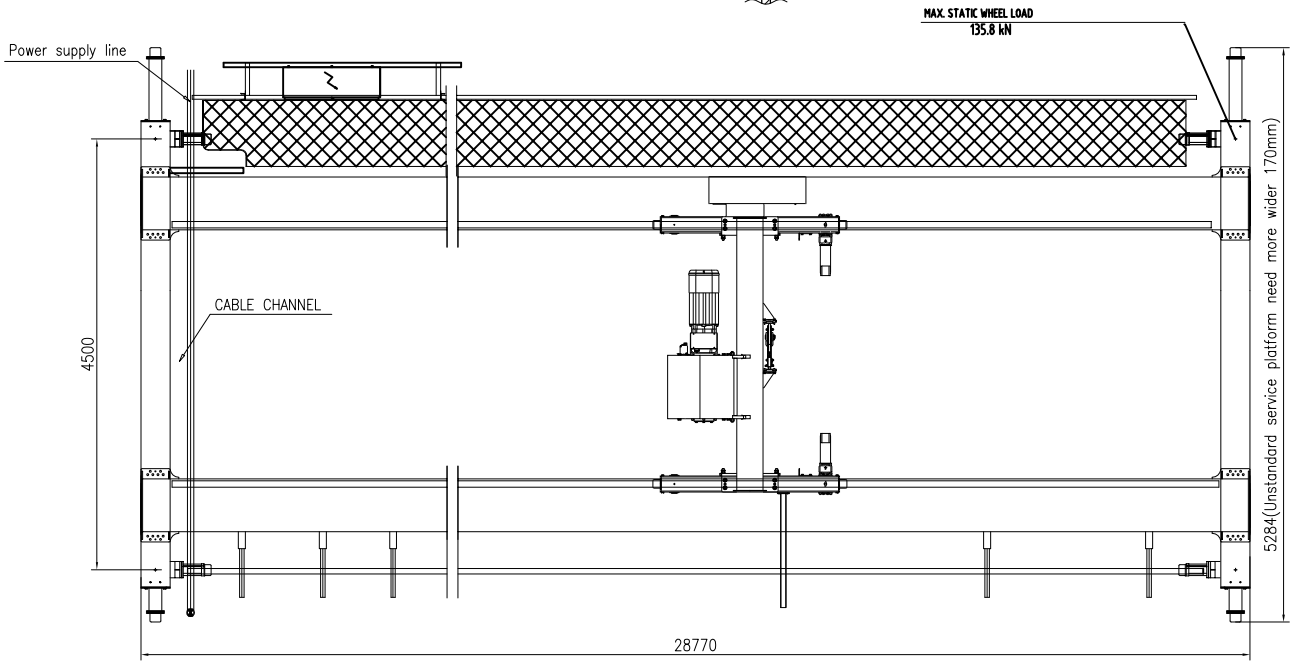

TECHNICAL DATA

LOAD	16t
SPAN	28.5m
LIFTING HEIGHT	12m
HOISTING SPEED	4/0.7 m/min 2-SPEED
TRAVERSING SPEED	0-20 m/min STEPLESS
TRAVELLING SPEED	0-32 m/min STEPLESS
WEIGHT OF TROLLEY	1.55t
WEIGHT OF CRANE	20.1t
POWER SUPPLY	380V/48V/50Hz
CRANE GROUP	FEM A5
HOIST GROUP	M5(FEM 2m)
BRIDGE TRAVEL GROUP	M5(FEM 2m)
SUPPLY POWER	18.9kW

TOLERANCES ACC. TO ISO/FEM STANDARD
BRIDGE PAINT: E120/RAL1028
DRAWING NOT IN SCALE

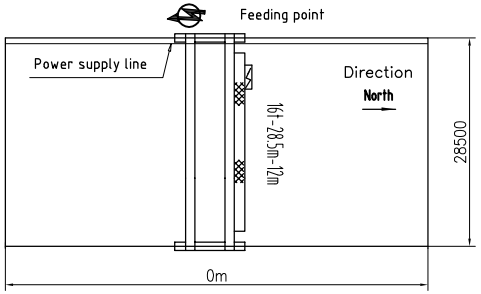

PRELIMINARY DRAWING,OFFER ONLY.

Rev.	Pcs.	Area	Modi.Index	Modified	Date	Name			RU02
Designed	RU02	2023/08/25	Standardized			Material code			Part Name
Checked			Approved		2023/08/25	Stage	Weight(Kg)	Issue	KD16t×28.5m×12m-A5
Verified		2023/08/25			Size		20100	A0	
Processed			Scale	1:35	A2	Total	Page		DWG No.

HOIST