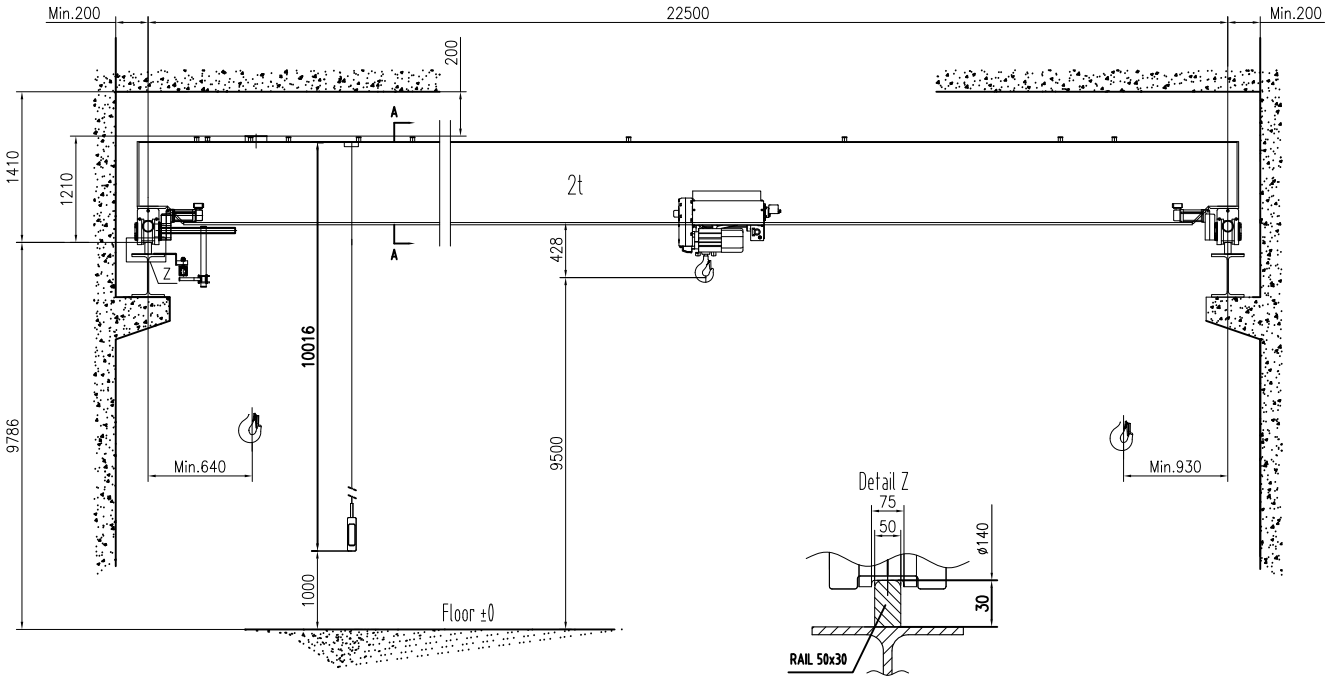

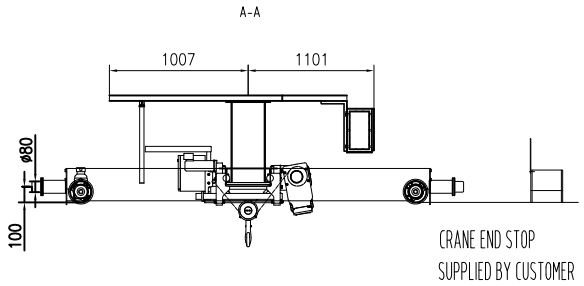

TECHNICAL DATA

LOAD	2t
SPAN	22.5m
LIFTING HEIGHT	9.5m
HOISTING SPEED	5/0.8 m/min 2-SPEED
TRAVERSING SPEED	0-20 m/min STEPLESS
TRAVELLING SPEED	0-32 m/min STEPLESS
WEIGHT OF TROLLEY	0.26t
WEIGHT OF CRANE	5.3t
POWER SUPPLY	380V/48V/50Hz
CRANE GROUP	FEM A5
HOIST GROUP	M6(FEM 3m)
BRIDGE TRAVEL GROUP	M5(FEM 2m)
SUPPLY POWER	2.75kW

TOLERANCES ACC. TO ISO/FEM STANDARD
BRIDGE PAINT: E120/RAL1028
DRAWING NOT IN SCALE

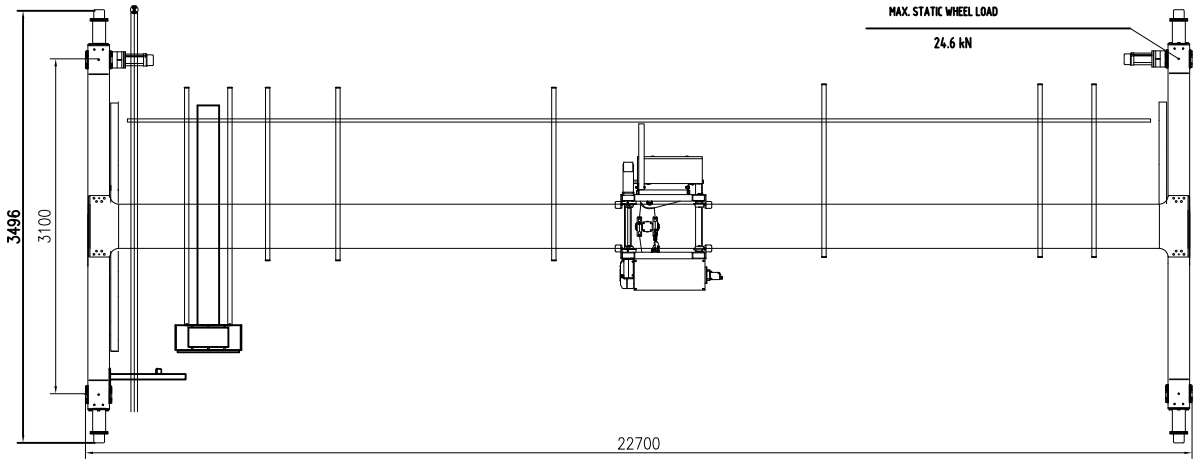

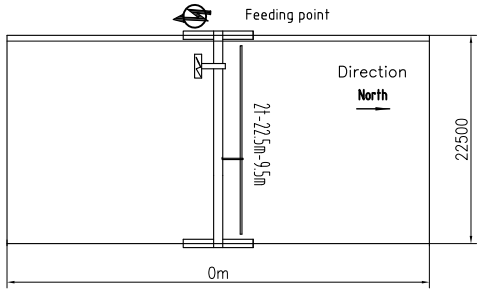

PRELIMINARY DRAWING,OFFER ONLY.

Rev.	Pcs.	Area	Modi.Index	Modified	Date	Name		RU02
Designed	RU02	2023/08/24	Standardized			Material code		Part Name
Checked			Approved		2023/08/24	Stage	Weight(Kg) / Issue	KS2t×22.5m×9.5m-A5
Verified		2023/08/24			Size		5300 / A0	
Processed			Scale	1:35	A2	Total	Page	DWG No.

HOIST