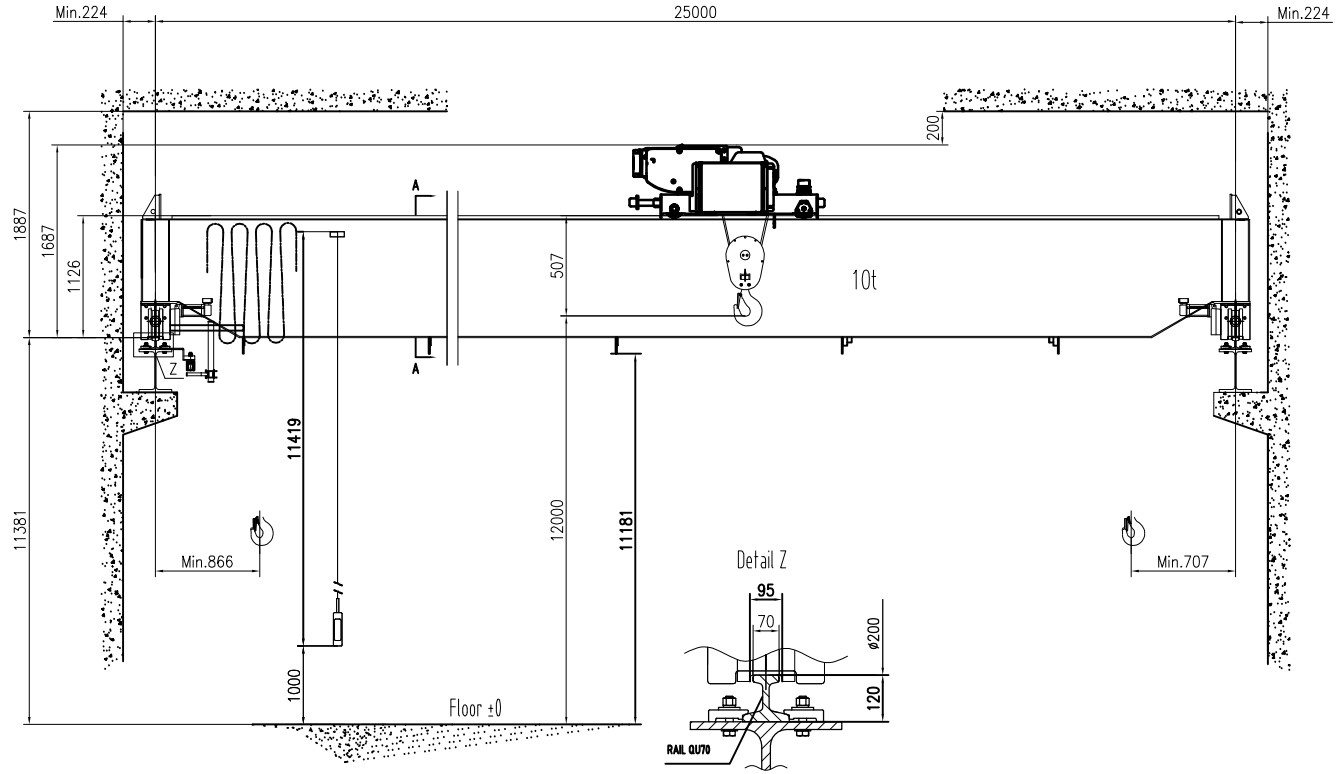

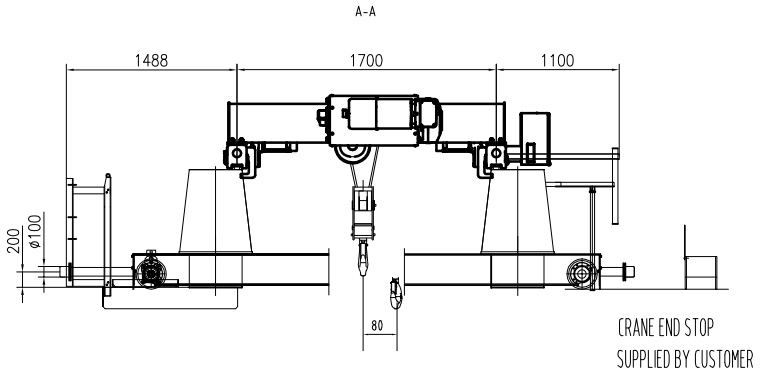

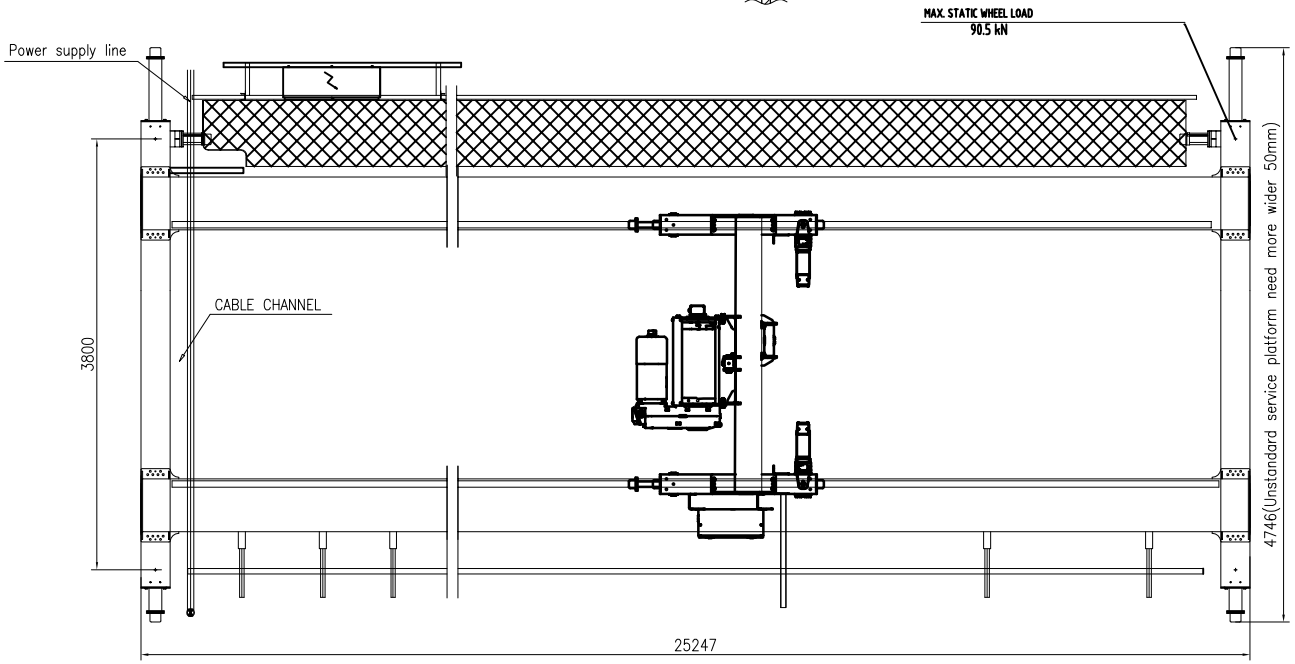

TECHNICAL DATA

LOAD	10t
SPAN	25m
LIFTING HEIGHT	12m
HOISTING SPEED	4/0.7 m/min 2-SPEED
TRAVERSING SPEED	0-20 m/min STEPLESS
TRAVELLING SPEED	0-32 m/min STEPLESS
WEIGHT OF TROLLEY	0.93t
WEIGHT OF CRANE	14.0t
POWER SUPPLY	380V/48V/50Hz
CRANE GROUP	FEM A5
HOIST GROUP	M5(FEM 2m)
BRIDGE TRAVEL GROUP	M5(FEM 2m)
SUPPLY POWER	12.5kW

TOLERANCES ACC. TO ISO/FEM STANDARD
BRIDGE PAINT: E120/RAL1028
DRAWING NOT IN SCALE

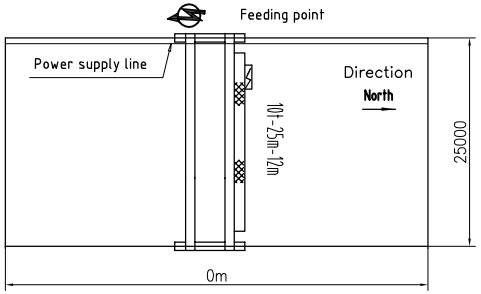

PRELIMINARY DRAWING,OFFER ONLY.

Rev.	Pcs.	Area	Modi.Index	Modified	Date
Designed	RU02	2024/02/09	Standardized		
Checked			Approved		2024/02/09
Verified		2024/02/09			
Processed			Scale	1:35	A2

Name				RU02
Material code				Part Name
Stage	Weight(Kg)	Issue		KD101×25m×12m-A5
	14000	A0		
Total	Page			DWG No.

HOIST