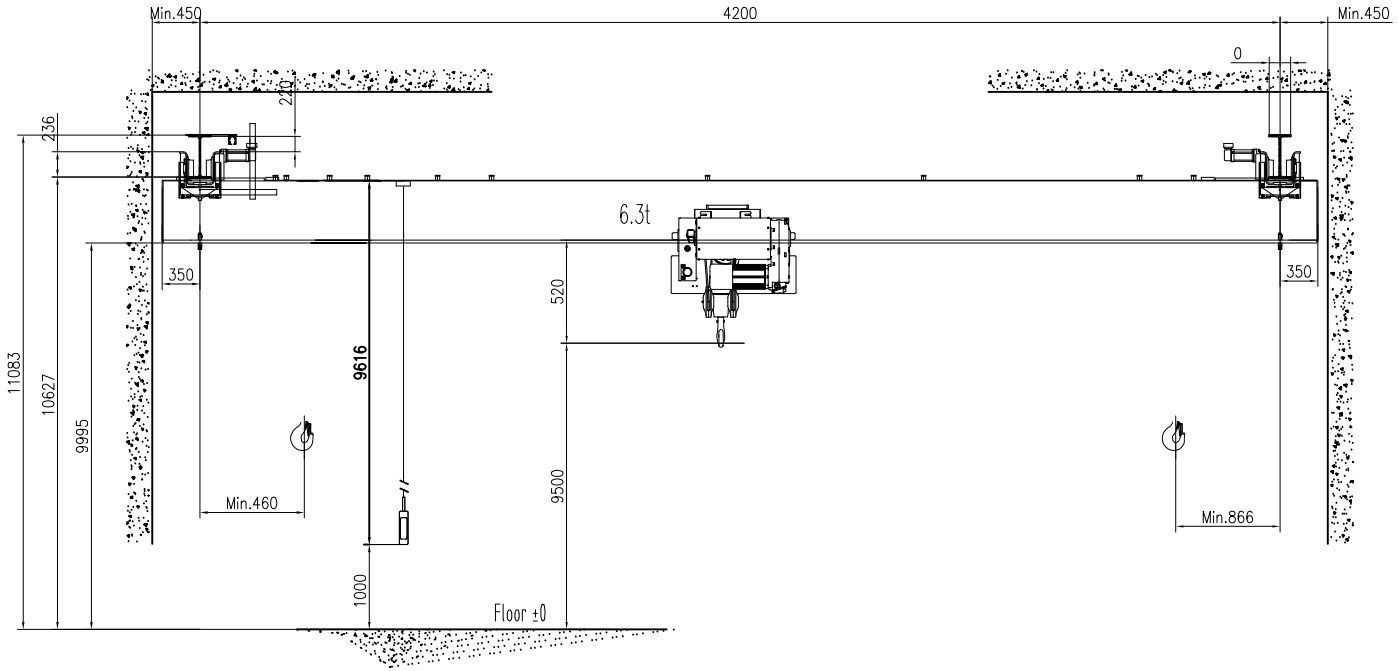

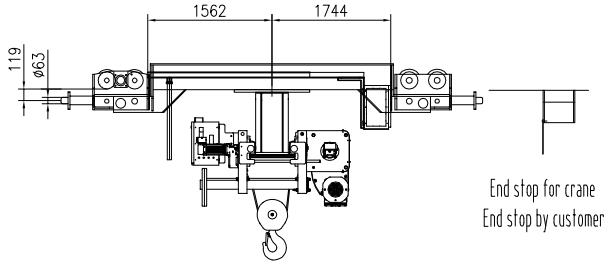

TECHNICAL DATA

LOAD	6.3t
SPAN	4.2m
LIFTING HEIGHT	9.5m
HOISTING SPEED	4/0.7 m/min 2-SPEED
TRAVERSING SPEED	0-20 m/min STEPLESS
TRAVELLING SPEED	0-20 m/min STEPLESS
WEIGHT OF TROLLEY	0.74t
WEIGHT OF CRANE	2.2t
POWER SUPPLY	380V/48V/50Hz
CRANE GROUP	FEM A5
HOIST GROUP	M6(FEM 3m)
BRIDGE TRAVEL GROUP	M5(FEM 2m)
SUPPLY POWER	9.9kW

TOLERANCES ACC. TO ISO/FEM STANDARD

BRIDGE PAINT: E120/RAL1028

DRAWING NOT IN SCALE

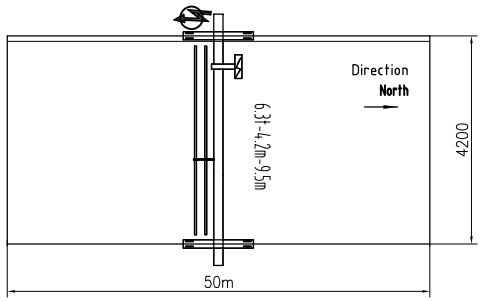

PRELIMINARY DRAWING,OFFER ONLY.

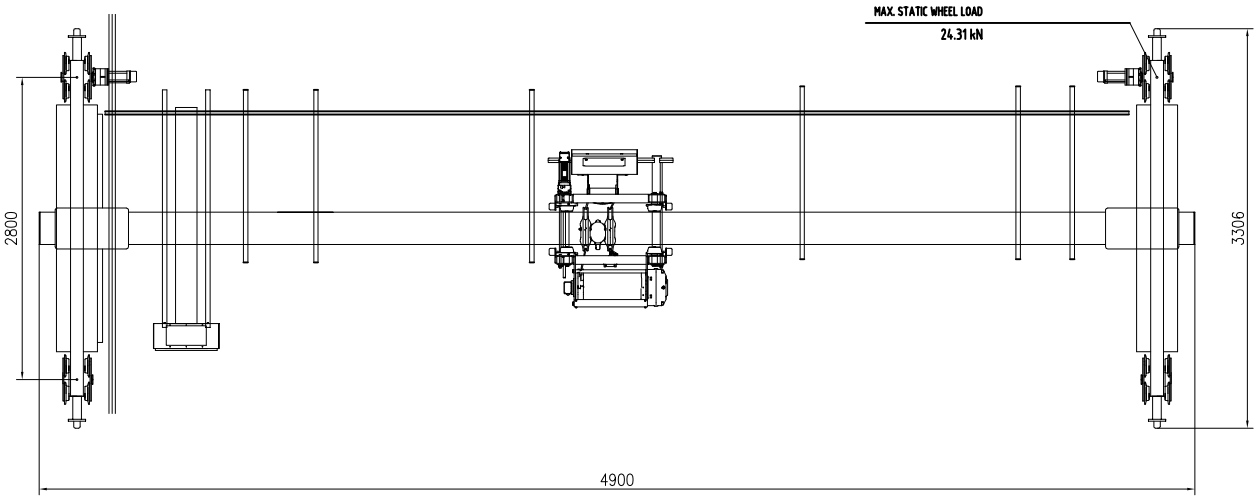

Rev.	Pcs.	Area	Modi.Index	Modified	Date	Material			RU02
Designed	RU02	2024/03/22	Standardized			Material code			Part Name
Checked			Approved		2024/03/22	Stage	Weight(Kg)	Issue	KU6.3t×4.2m×9.5m-A5
Verified		2024/03/22			Size		2200	A0	
Processed			Scale	1:35	A2	Total	Page		DWG No.

HOIST